Tagra | SSC16 | LED Profile End Caps | Silver | 4 Pack

1616-ENDCAP / ITM000740

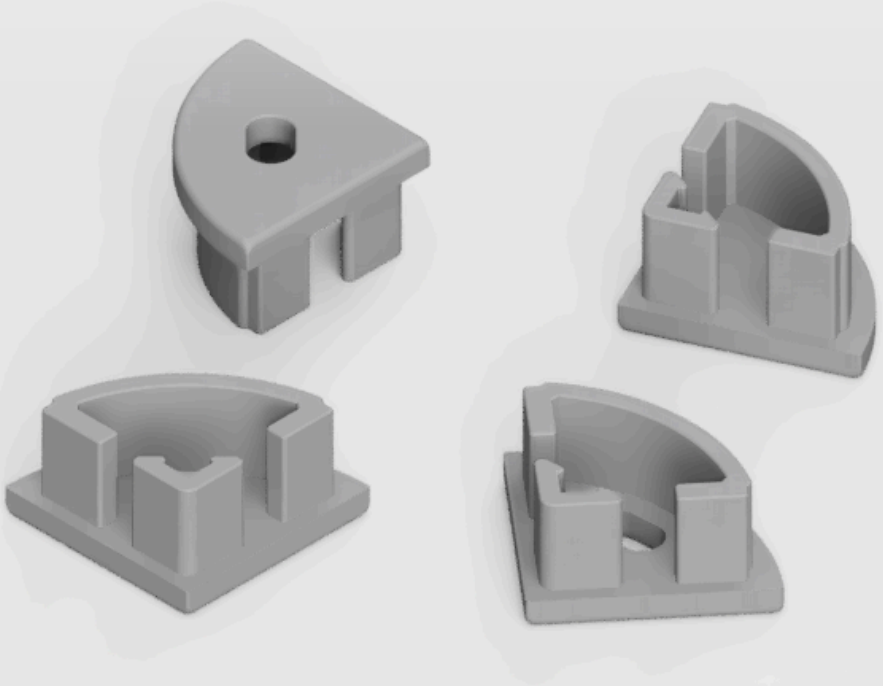

Datasheet

23-10-2026

www.tagra-lighting.co.uk

support@tagra-lighting.co.uk

Tagra | SSC16 | LED Profile End Caps | Silver | 4 Pack

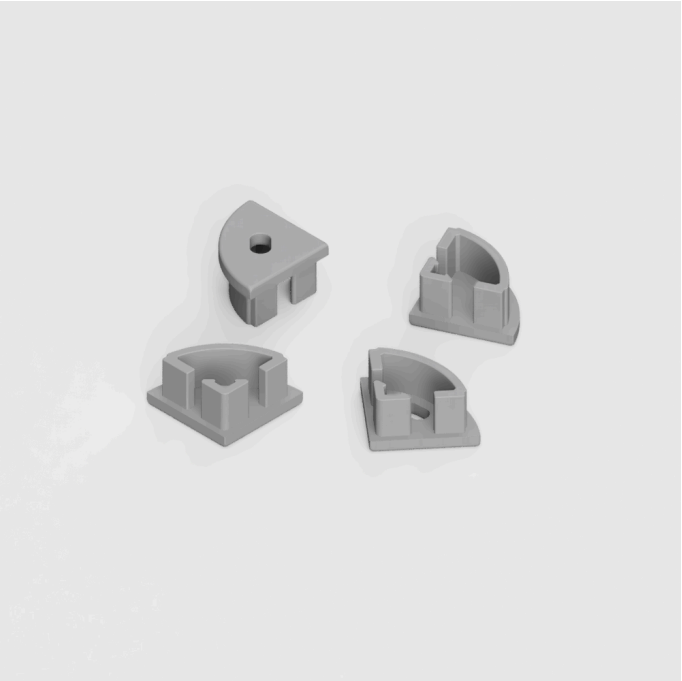

Colour	Material	Pack Size	Warranty
Silver	Plastic	4 PCS	5 Years

SKU: 1616-ENDCAP
ITM: ITM000740

Key Features:

- **Body Colour:** Silver
- **Warranty:** 5 Years
- **Dimensions (W x H x L):** 260 x 420 x 16mm

Mechanical Data			
Body Colour:	Silver	**Entry Cable Direction:**	Top
Product Weight:	4g	**Dimensions (LxWxH):**	16 x 260 x 420mm

Environmental Data			
Body Material:	Plastic	**Ingress Protection (IP):**	IP20

Dimension Drawing

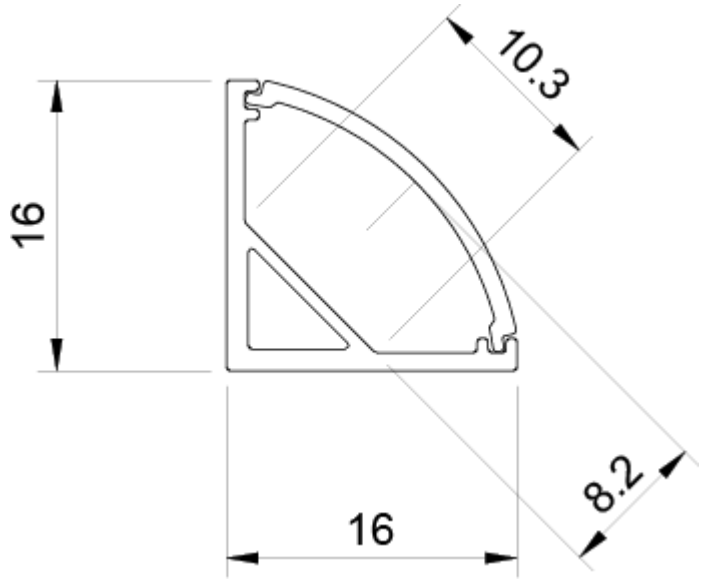

Packaging Data

Items / Sets Per Pack:	4	**Packaging Height:**	8mm
Packaging Length:	90mm	**Packaging Width:**	60mm
Packaging Weight:	4.47g		

Disclaimer

Tagra Lighting have taken reasonable care to ensure that the information in this datasheet is accurate at time of publication however it should be noted that all specifications are subject to tolerance. Descriptive specifications such as colour are subjective. Tagra Lighting reserve the right to update specifications without notice. The information in the datasheet may only be relied on by customers of Tagra Lighting in accordance with applicable terms and conditions.

Tagra Lighting is a trading name of T.R Ventures Limited, a company incorporated in England with registered number 07757720. Our registered office is Unit 2, Southfield Industrial Estate, Trafford Park, M17 1SJ.

www.tagra-lighting.co.uk

support@tagra-lighting.co.uk